Toilet Partition Fittings

Toilet Partition Fittings

Surface-Mounted Toilet Bolts

Easy to install, surface-mounted toilet bolts with indicator to denote whether room is occupied or vacant. Available with slotted button or with safety release turn.

Materials

Zinc alloy castings, display packed with fixing screws.

Surface-mounted bolt and indicator

Product	Feature	Finishes	Packaging	Part Number
L547-548	Slotted Button	Chrome	Display Pack	547/548 CP
	Slotted Button	Satin Chrome	Display Pack	547/548S CP

Surface-mounted bolt and indicator with safety release

Product	Feature	Finishes	Packaging	Part Number
L547-549	Safety Release Turn	Chrome	Display Pack	547/549 CP
	Safety Release Turn	Satin Chrome	Display Pack	547/549 SCP

800 Series Surface-Mounted Toilet Bolts

Features and Specifications

These surface-mounted bolts feature easy installation, concealed screw fixing and positive red and green indicators to denote if the room is occupied or vacant.

Materials

- Brass bolt and indicator trim
- High purity zinc alloy case, strike rose and knob
- Mild steel mounting plate

Door Thickness

28 to 52 mm

Standard Finish

Satin Chrome SC

Non Standard Finishes

Polished Brass PB
Chrome Plate CP

Part Numbers

Toilet bolt without indicator	800 SCP
Toilet bolt with indicator (emergency release)	801 SCP
Toilet bolt with indicator (hospital release)	802 SCP

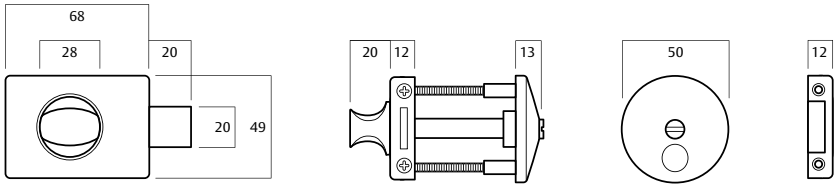

Toilet bolt without indicator

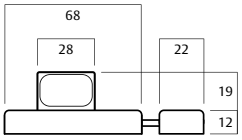

Toilet bolt with indicator (emergency release)

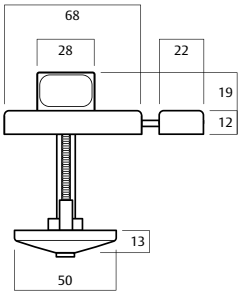

Toilet bolt with indicator (hospital release)

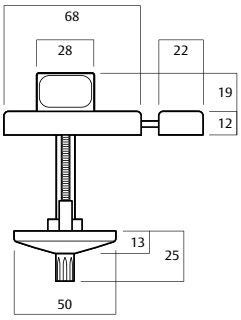

Toilet Partition Fittings

810 Series Mortice Mounted Toilet Bolt

Features and Specifications

These tubular bolts feature easy installation, concealed screw fixing with positive red and green indicators to denote if the room is occupied or vacant.

Materials

- Brass indicator trim
- Stainless steel strike
- High purity Zinc alloy roses, knob, bolt and case

Door Thickness

28 to 52 mm

Standard Finish

Satin Chrome SC

Non Standard Finish

Polished Brass PB
Chrome Plate CP

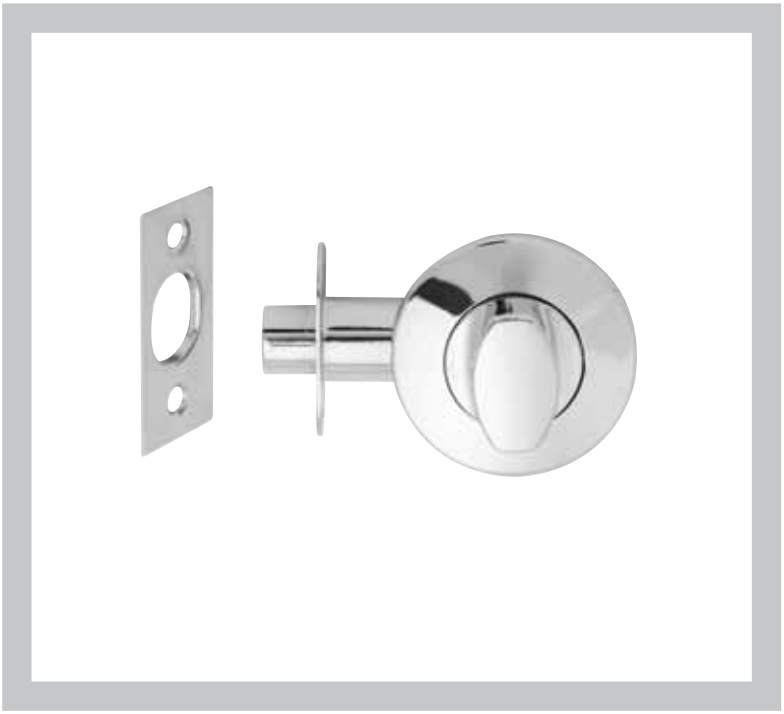

Part Numbers

Toilet bolt without indicator	810 SCP
Toilet bolt with indicator (emergency release)	811 SCP
Toilet bolt with indicator (hospital release)	812 SCP

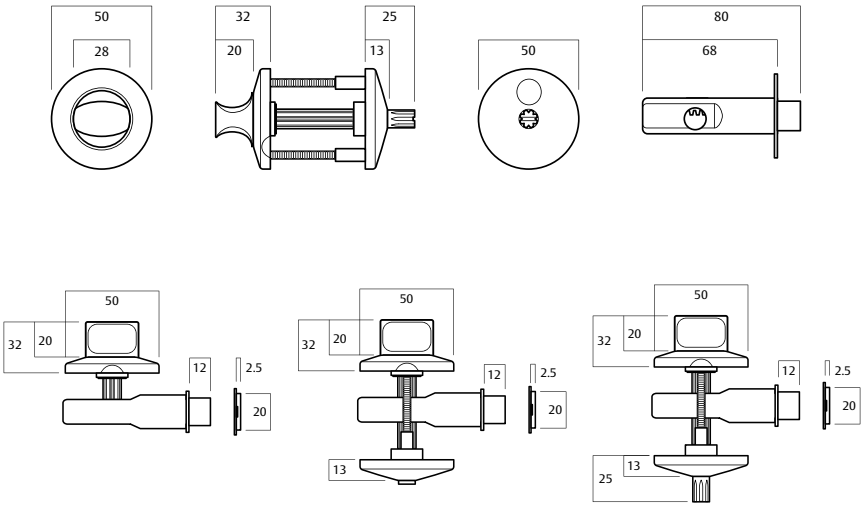

For product availability please refer to the current price list, contact customer service or your local sales office.

ASSA ABLOY is the global leader in door opening solutions, dedicated to satisfying end-user needs for security, safety and convenience

Lockwood is the leading brand in the Australian locking industry. With an established reputation for high quality products, this iconic brand provides a wide range of locking solutions to residential housing, commercial building and industrial application markets. Lockwood is supported by an extensive distribution and after-sales support network. Our customers include retailers, architects, trade and industrial personnel, locksmiths and security dealers.

ASSA ABLOY is the global leader in door opening solutions, dedicated to satisfying end-user needs for security, safety and convenience.

ASSA ABLOY is represented in all major regions, in both mature and emerging markets, with leading positions in Australia, Europe and North America.

As the world's leading lock group, ASSA ABLOY offers a more complete product range of door opening solutions than any other company in the market.

Australia
1300 LOCK UP (1300 562 587)
lockweb.com.au

New Zealand
+64 9415 7111
assaabloy.co.nz

ASSA ABLOY Australia Pty Ltd
235 Huntingdale Road
Oakleigh, Victoria, 3166
Australia

info.au@assaabloy.com
assaabloy.com.au

ASSA ABLOY New Zealand Ltd
6 Armstrong Road
Albany, North Shore City, 0632
New Zealand

info.nz@assaabloy.com
assaabloy.co.nz

ASSA ABLOY Australia Pty Limited ABN 90 086 451 907 ©2010